STEERING, LINKAGE & TILT - Z26S4D92AN/AH/BN/BH (C750131)

RZR - RZR PRO S4 ULTIMATE (R01) - Z26S4D92AN/AH/BN/BH

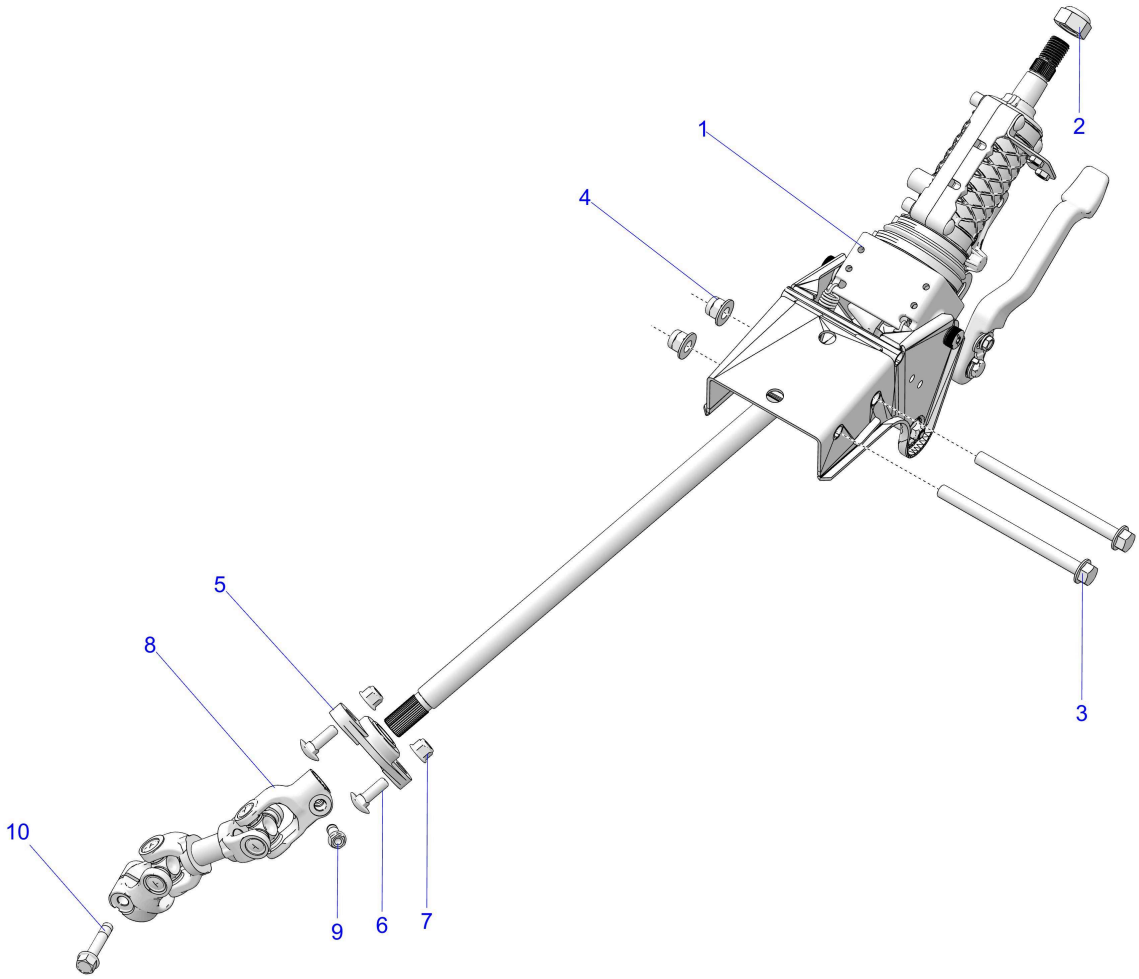

© 2023 Polaris Industries Inc.

C750131

Reference #	*Part#*	*Description*	*Quantity*
1	1830005	ASM-TILT/TELE,STEERING	1
2	7547506	NUT-HEX-M16X2, 8 ZC NYL	1
3	7518665	BOLT-M10X1.25X130,HXFLG-OLIVED	2
4	7547333	NUT-HXFL M10X1.25 8 ZTB NYL	2
5	7061287	BEARING-IGUS 19MM	1
6	7520298	SCR-RHCAR-M8X1.25X25 10.9 ZB3	2
7	7547332	NUT- M8X1.25, FLG, NYLOC-OLIVE D	2
8	1824993	SHAFT-STEERING,PWD RACK LWR	1
9	7521014	SCREW-HXFLGHD,M8X1.25X25,GEOMET	1
10	7521358	SCR-M8X1.25X40 10.9 HX/FL ZODP	1

Copyright 1996-2026 Polaris Industries U.S.A All rights reserved.